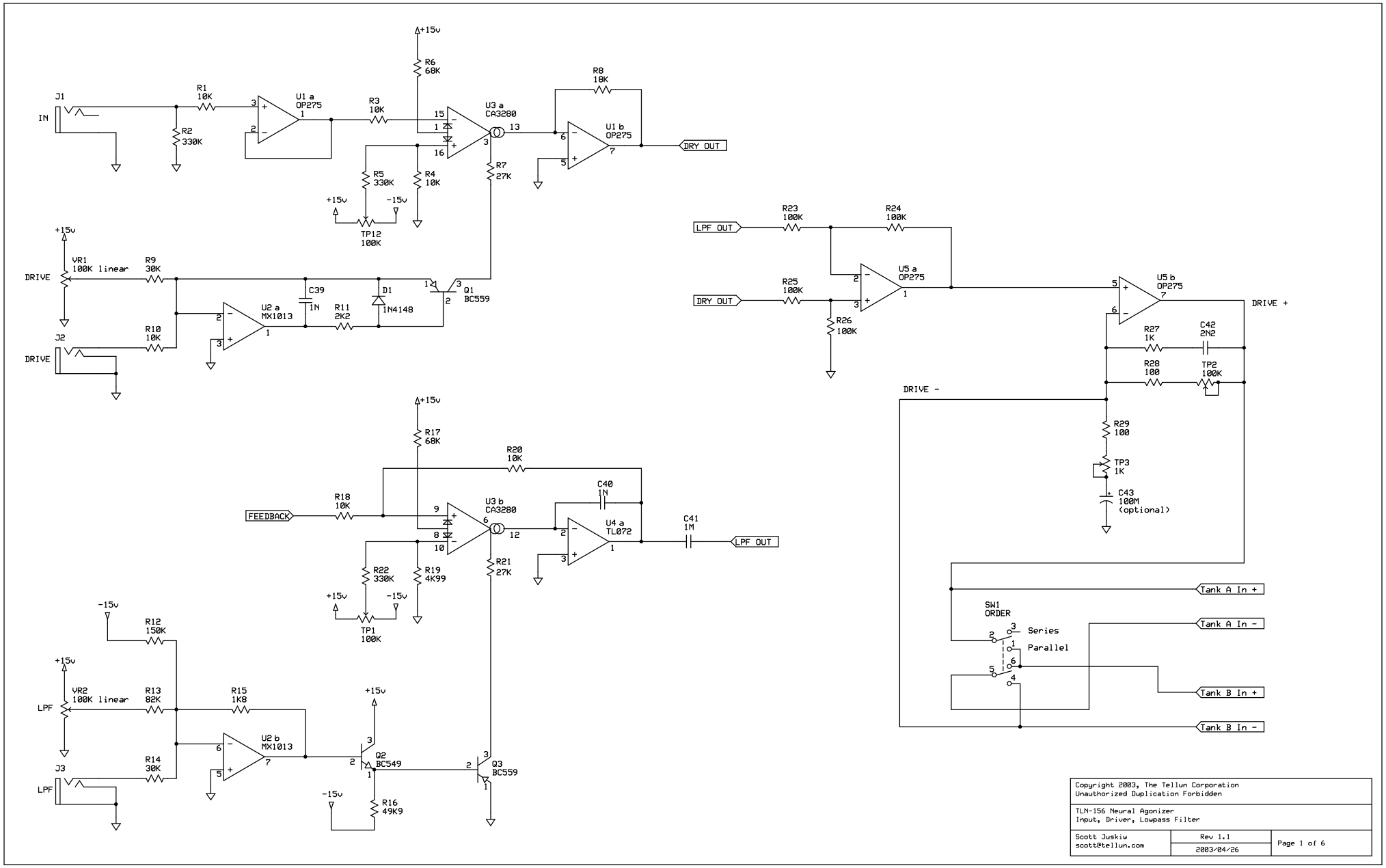

Copyright 2003, The Tellun Corporation
Unauthorized Duplication Forbidden

TLN-156 Neural Agonizer
Input, Driver, Lowpass Filter

Scott Juskiw
scott@tellun.com

Rev 1.1
2003/04/26

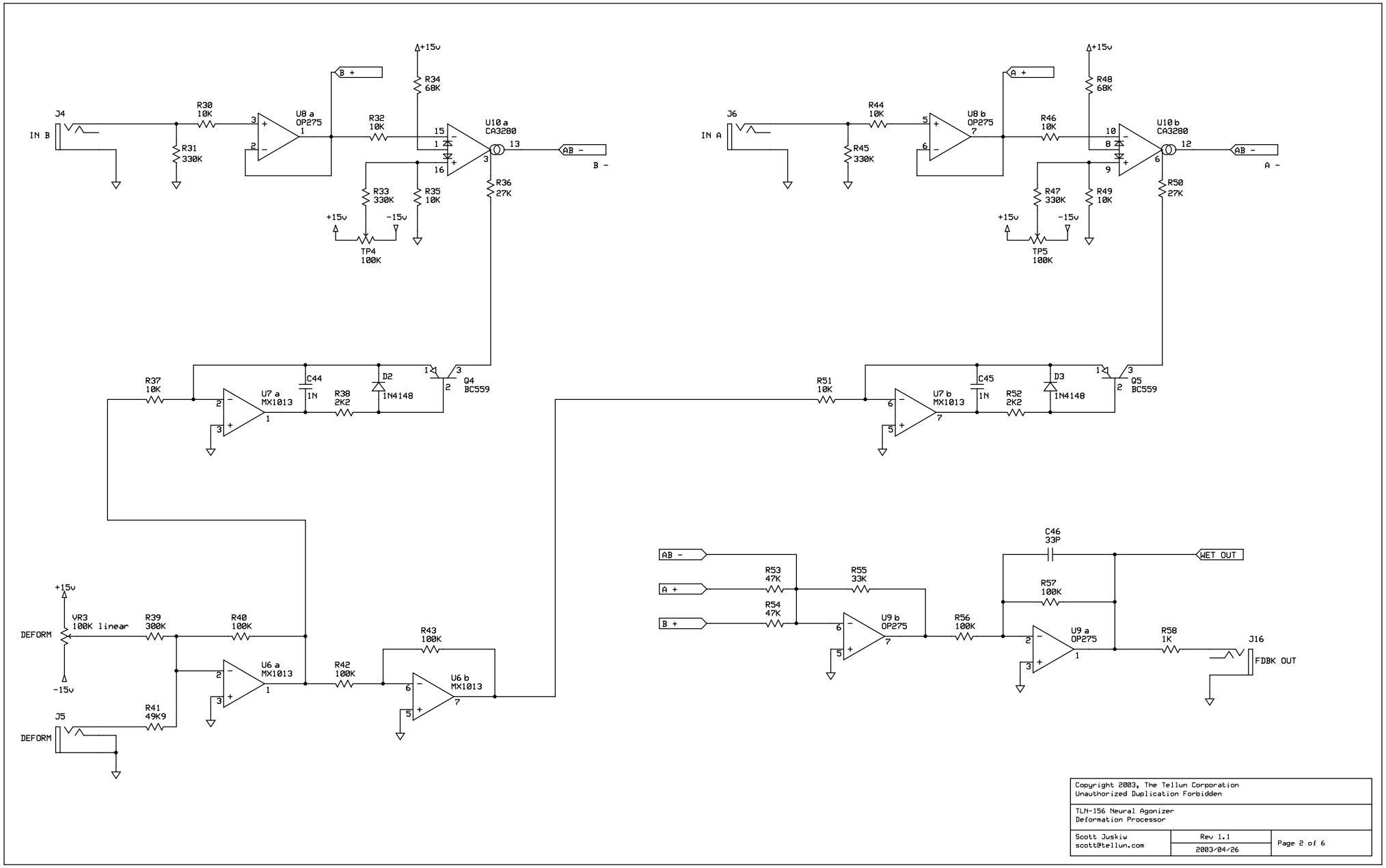

Copyright 2003, The Tellun Corporation
Unauthorized Duplication Forbidden

TLN-156 Neural Agonizer
Deformation Processor

Scott Juskiw
scott@tellun.com

Rev 1.1
2003/04/26

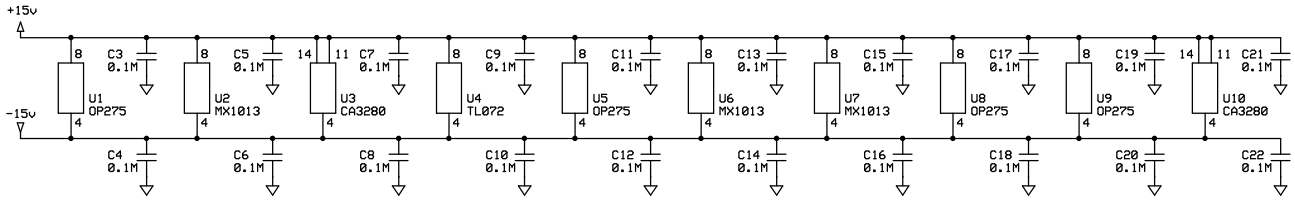

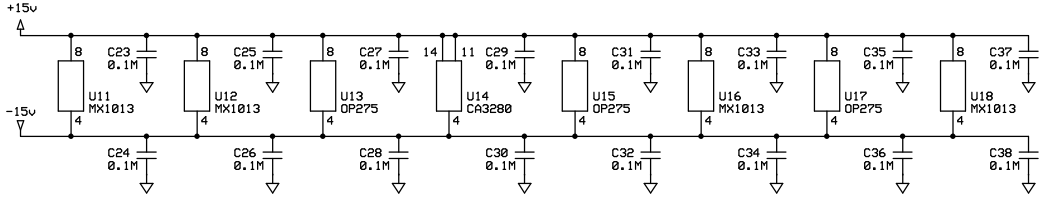

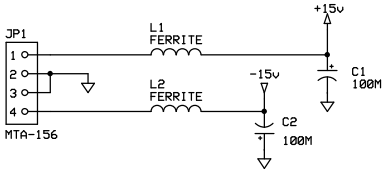

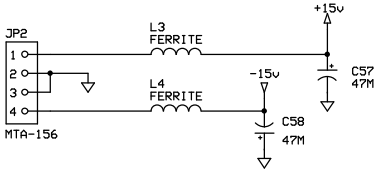

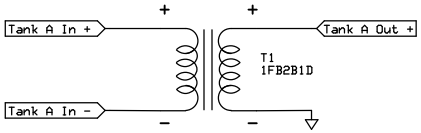

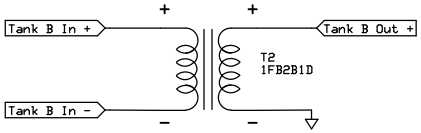

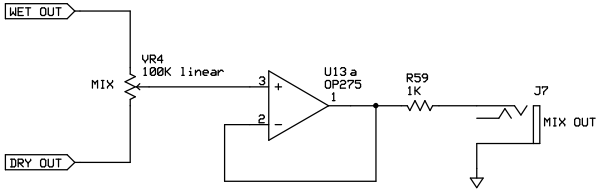

Copyright 2003, The Tellun Corporation
Unauthorized Duplication Forbidden

TLN-156 Neural Agonizer
Miscellaneous

Scott Juskiw
scott@tellun.com

Rev 1.1
2003/04/26

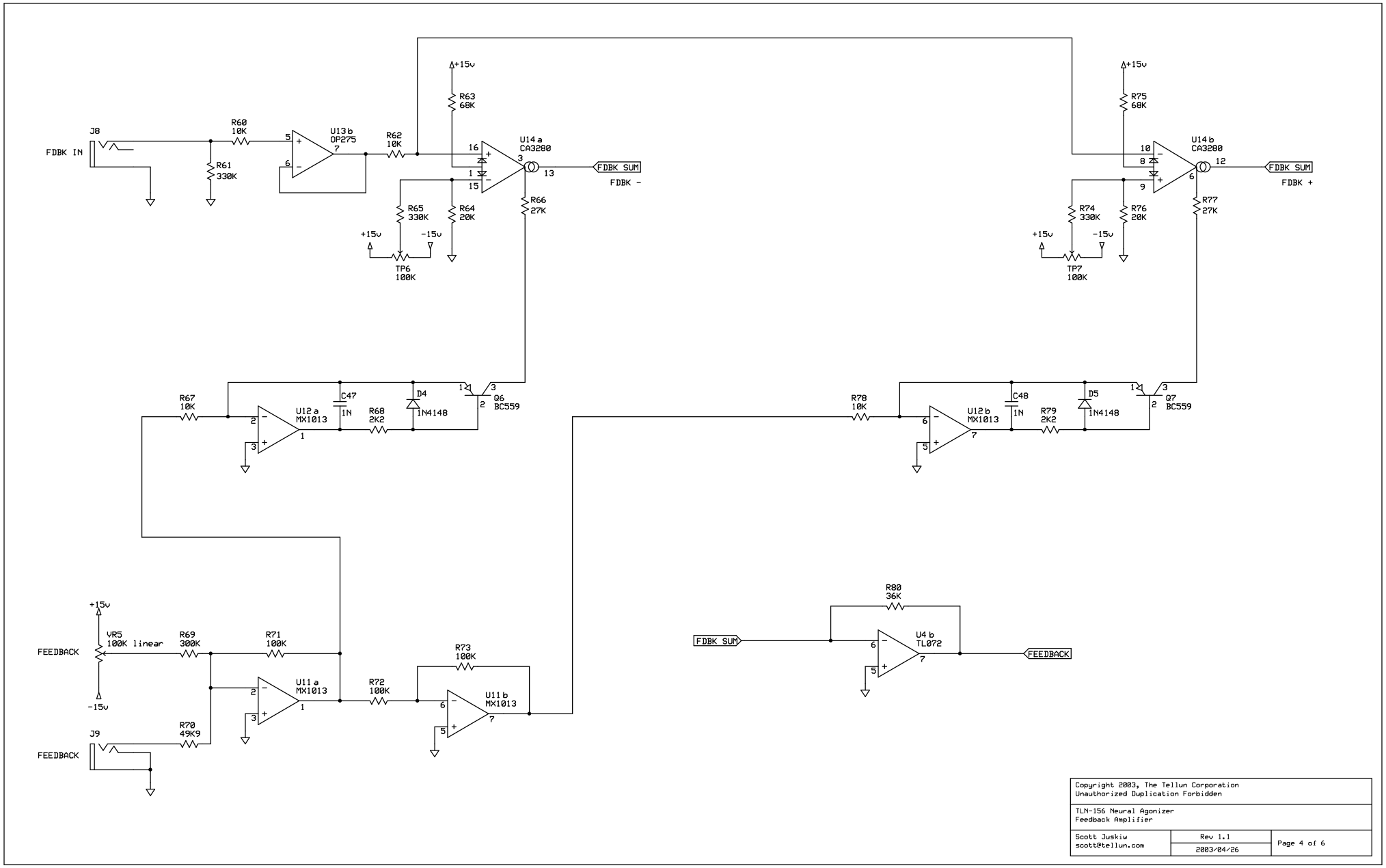

Copyright 2003, The Tellun Corporation
Unauthorized Duplication Forbidden

TLN-156 Neural Agonizer
Feedback Amplifier

Scott Juskiw
scott@tellun.com

Rev 1.1
2003/04/26

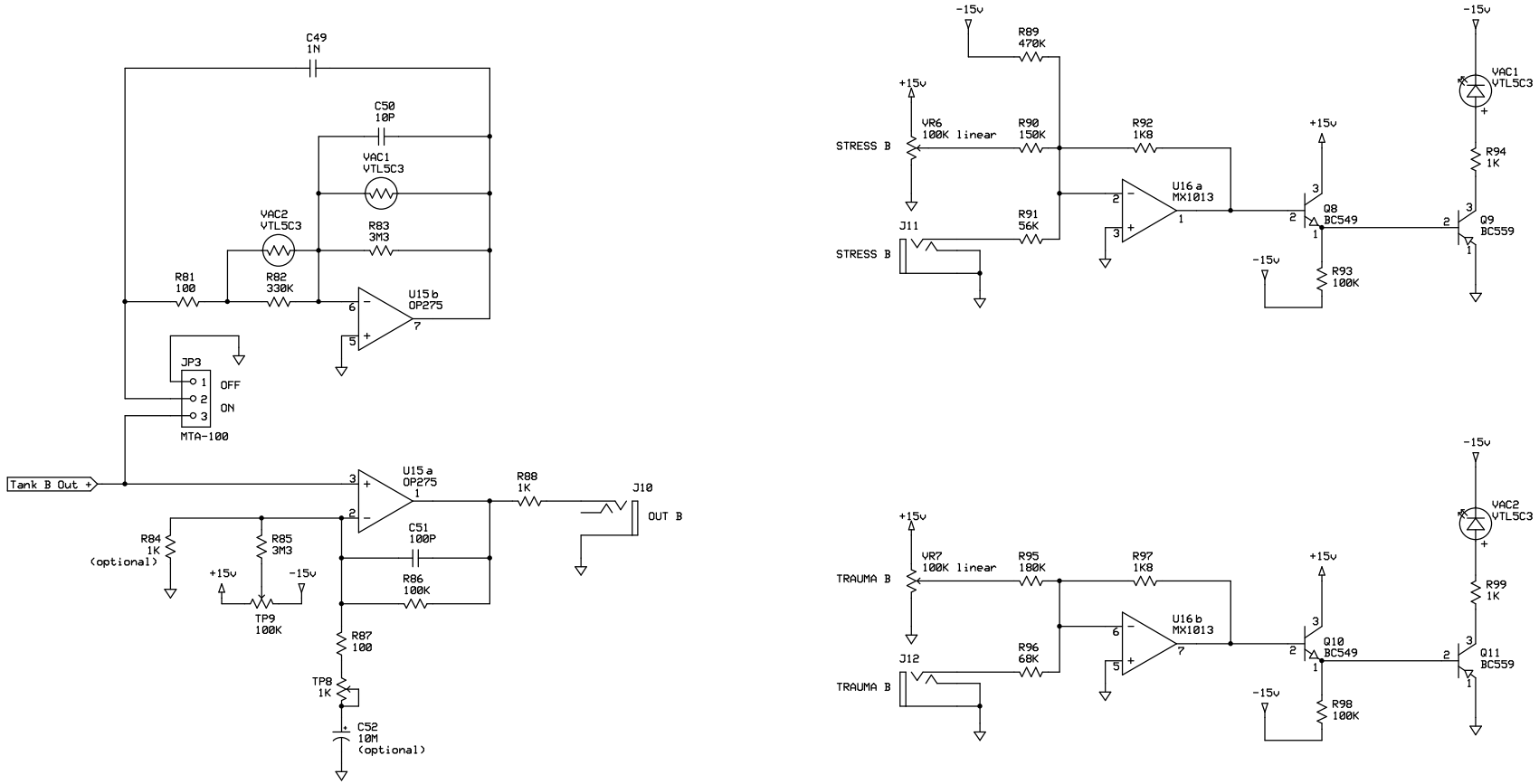

Copyright 2003, The Tellun Corporation
Unauthorized Duplication Forbidden

TLN-156 Neural Agonizer
Tank B Amplifier & Resonator

Scott Juskiw
scott@tellun.com

Rev 1.1
2003/04/26

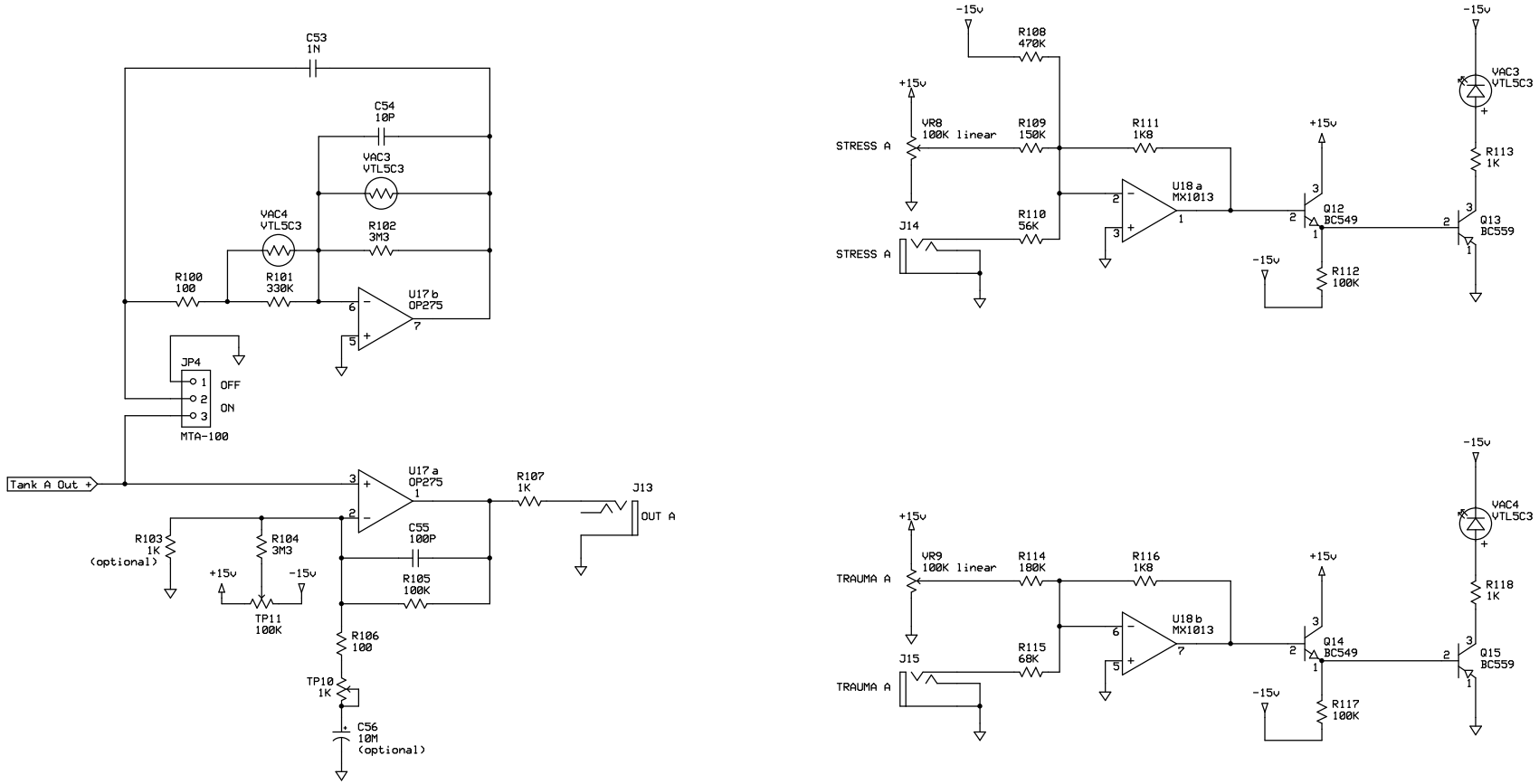

Copyright 2003, The Tellun Corporation
Unauthorized Duplication Forbidden

TLN-156 Neural Agonizer
Tank A Amplifier & Resonator

Scott Juskiw
scott@tellun.com

Rev 1.1
2003/04/26